Ipad mini1 tablet does not display fault repair

One of the customer's ipad mini1, the fault is not displayed when booting.

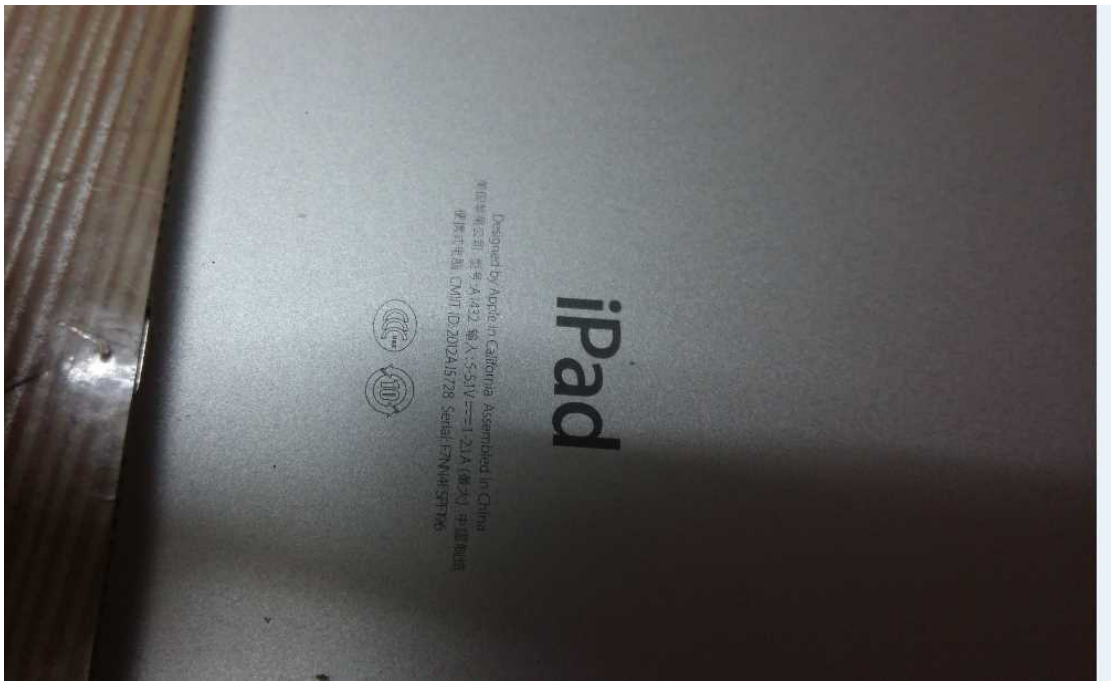

got the machine and the screen was broken. The customer said that the good machine suddenly fell to the ground, and the screen did not show up after the screen was broken.Pictured:

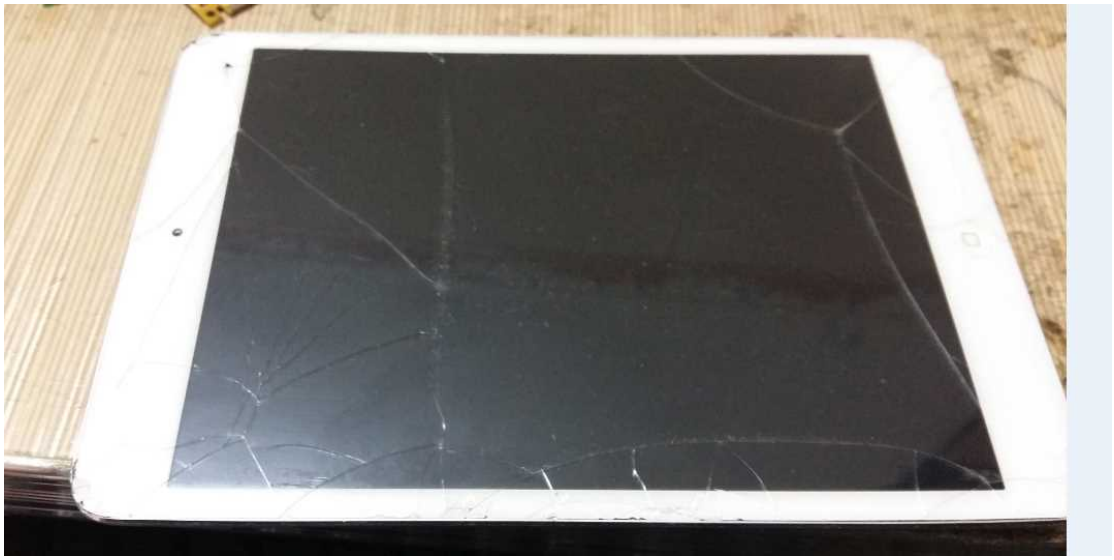

First use the Adjustable Power supply to boot and see the current can run normally and have a jump.The

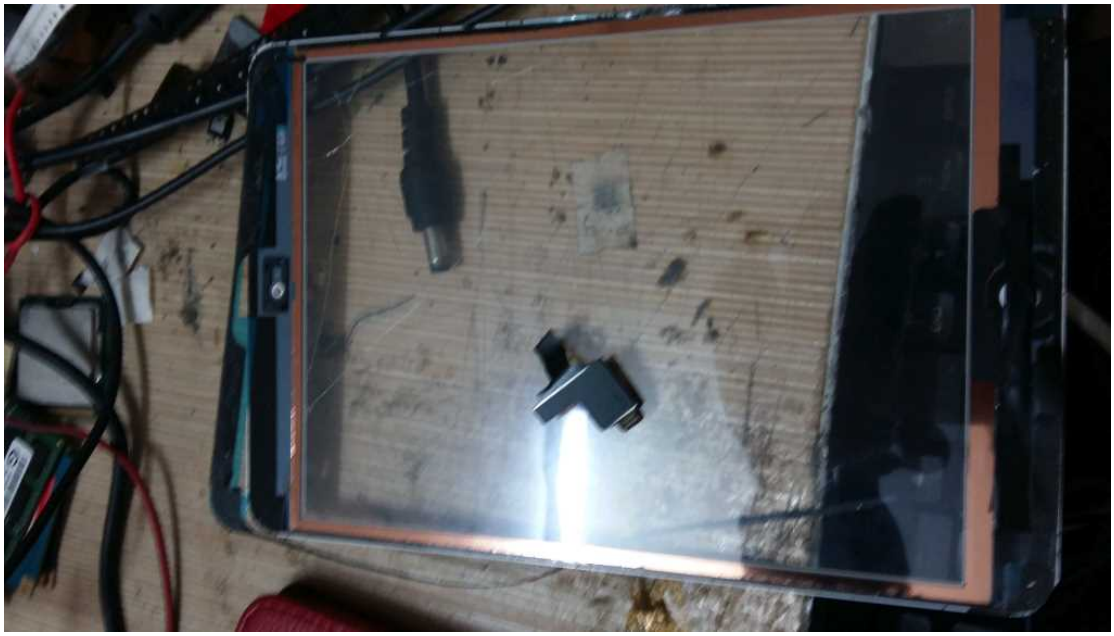



first eliminates external faults. For display and touch screen replacement, the boot test is still sounding.



This machine is suspected to be damaged due to the fall of the motherboard. It is easy to cause damage to the motherboard solder pad or components after the phone or tablet falls.Quickly take out the motherboard and fold the battery button VCC first.

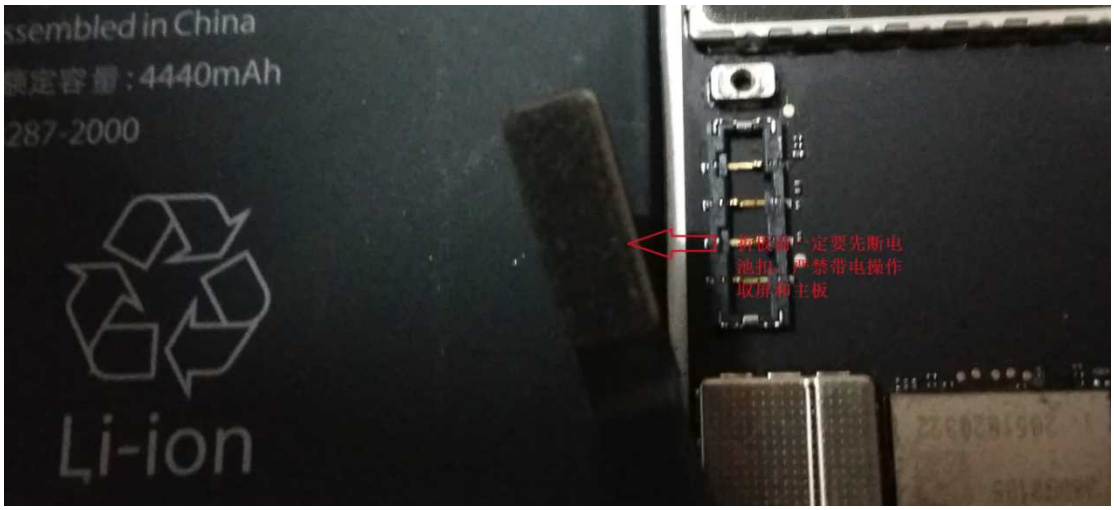

visual inspection board display interface, no obvious missing parts occurred.

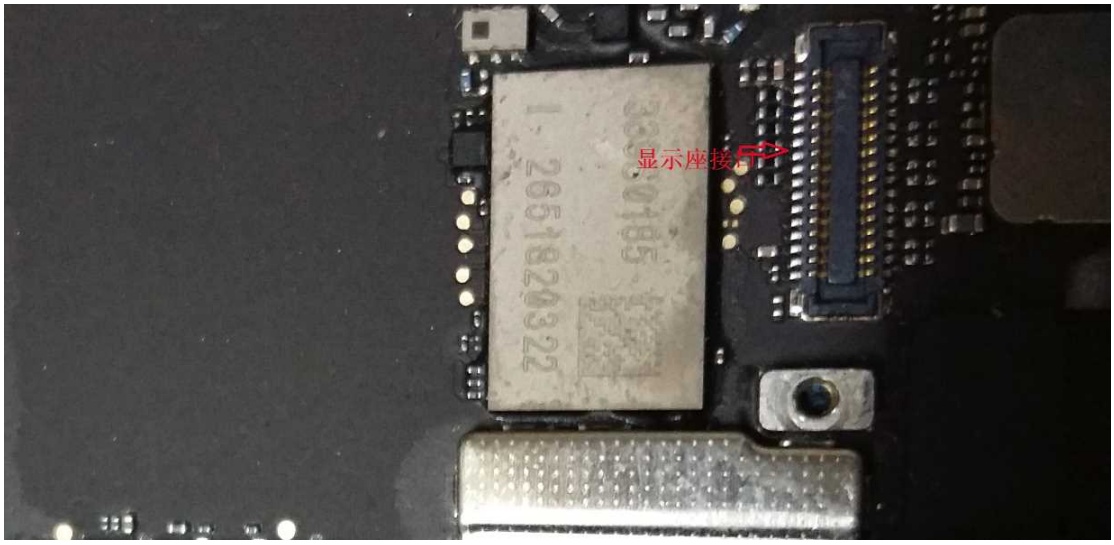

Folding the motherboard first finds the display interface, the

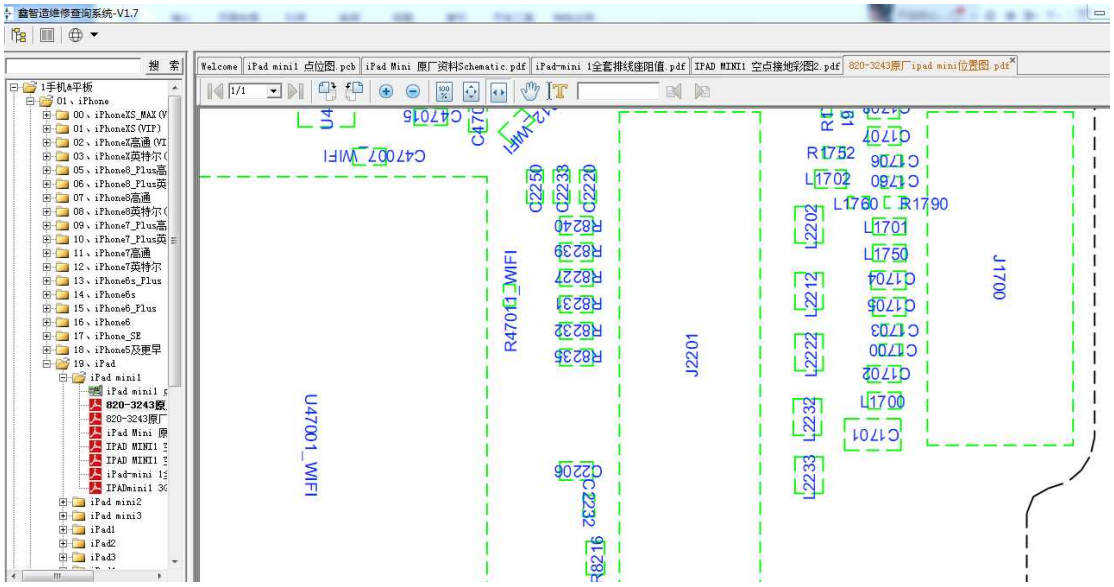

motherboard has the bit number j2201, and pulls out the line diagram to analyze the signal work, as shown in the figure:

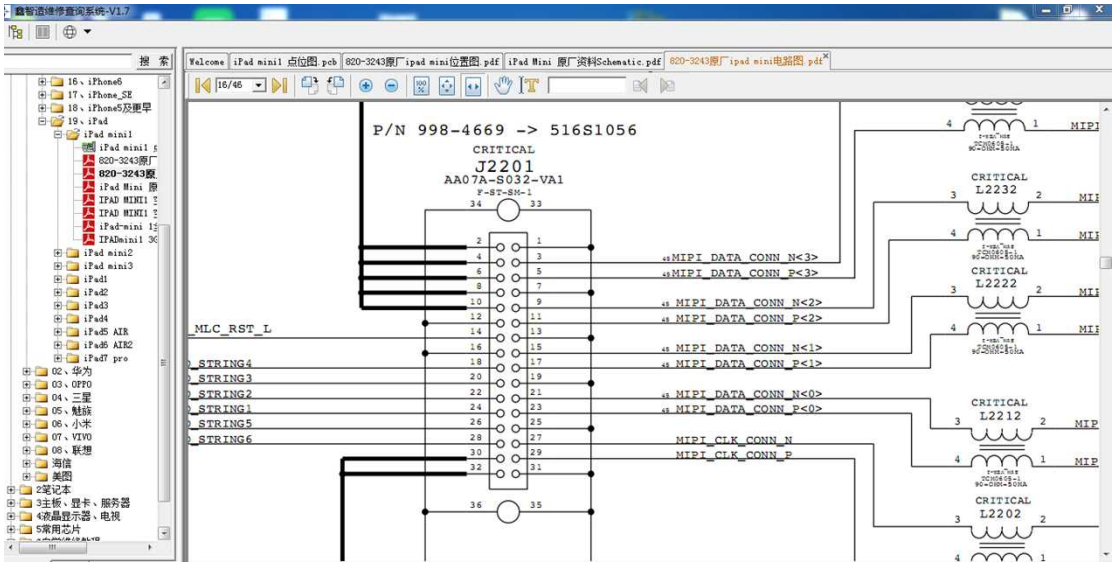

The Boardview is also positioned to the J2201.



This board physical interface is on the side of the wifi chip.



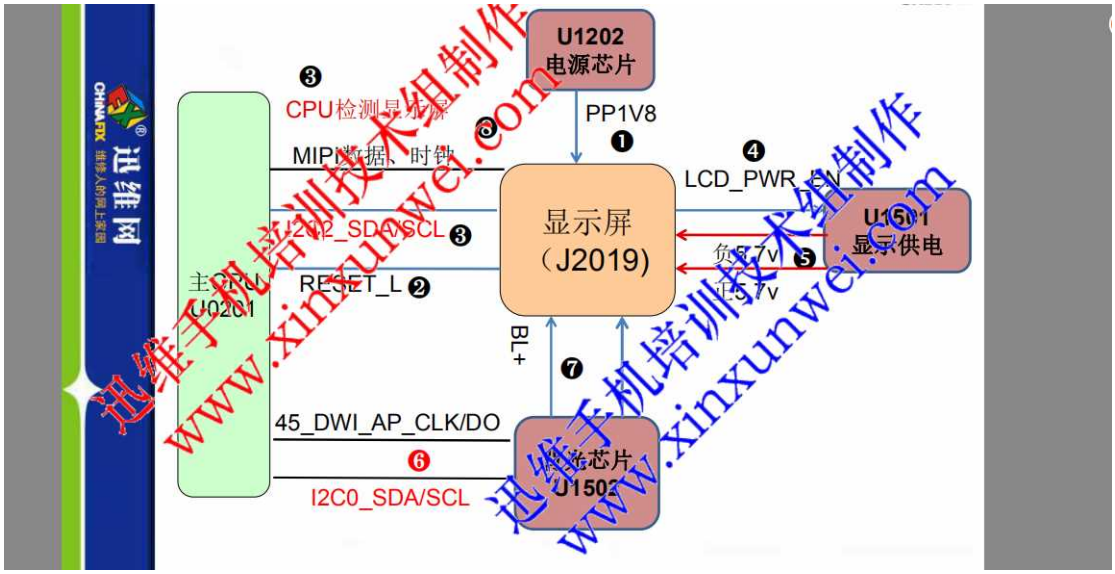

Refer to the iphone6 mobile phone display working principle analysis work process:

As can be seen from the above frame diagram, the display will not display normally after the VCC, backlight VCC and MIPI data clocks are displayed.

不显示维修思路

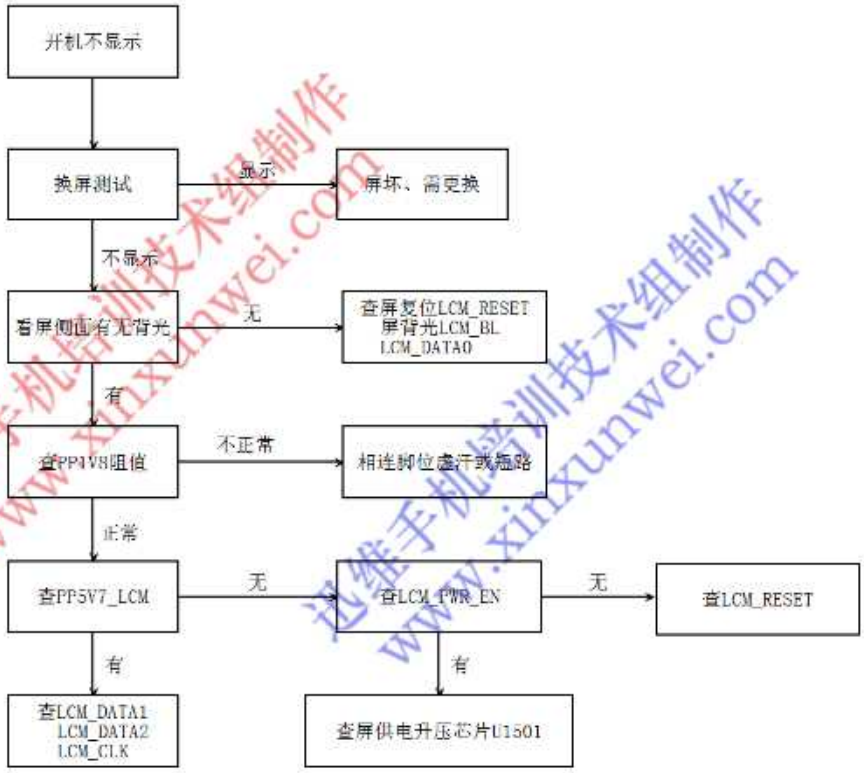

迅维手机培训技术组制作 www.xinxunwei.com

At the same time, refer to IPHONE6 does not show maintenance ideas. This panel does not display faults.The display has been replaced before, you can rule out its bad, consider this flat fell, so first use the X2204601 method to repair the J2201 display interface (first do not go to the display screen VCC circuit does not work, the display does not display), no words Said to use a multimeter to measure the J2201 interface to the ground diode value.

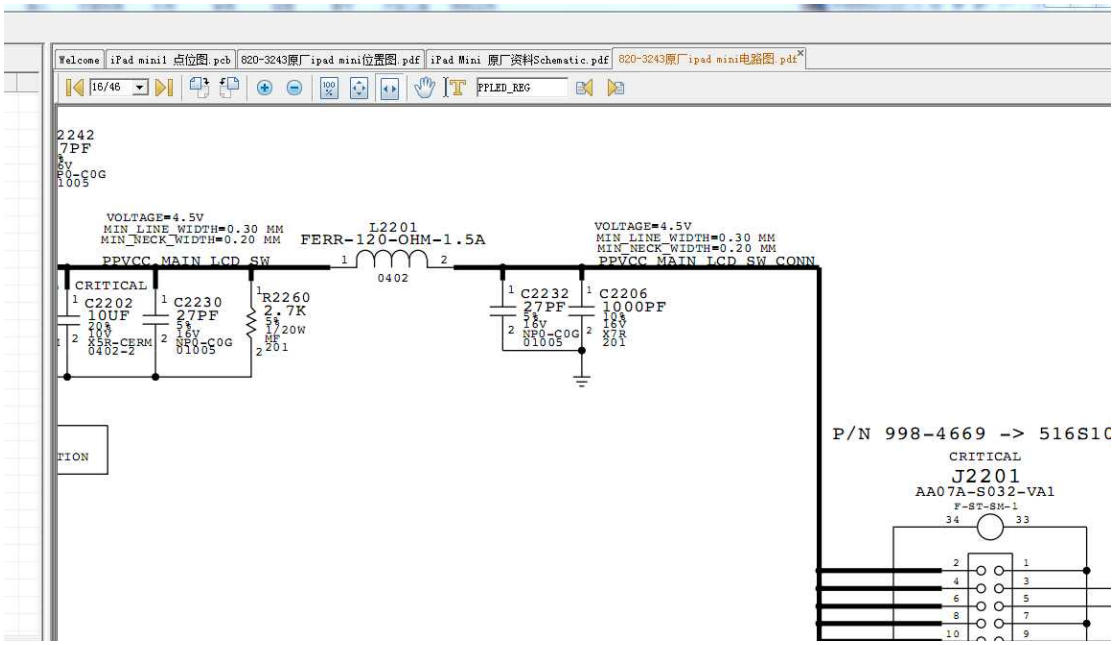

J2201 display interface 2, 4, 6, 8, 10 feet for PPVCC_MAIN_LCD_SW_CONN screen VCC, provided by L2201 and U2200 SLG5AP304 power chip PWM circuit,

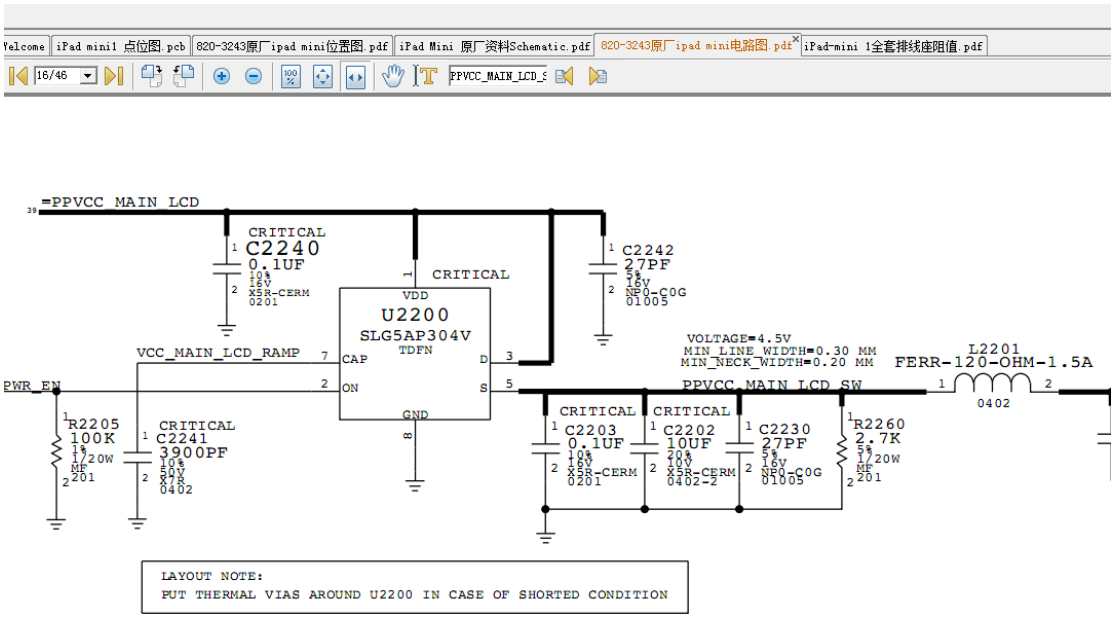

measured this J2201 seat 2 feet diode value 350, normal.

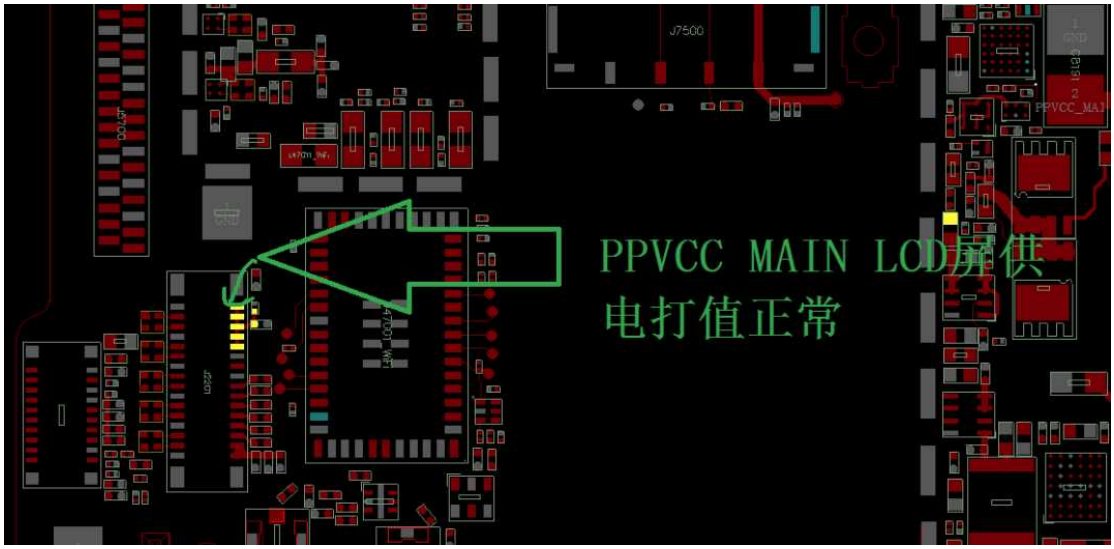

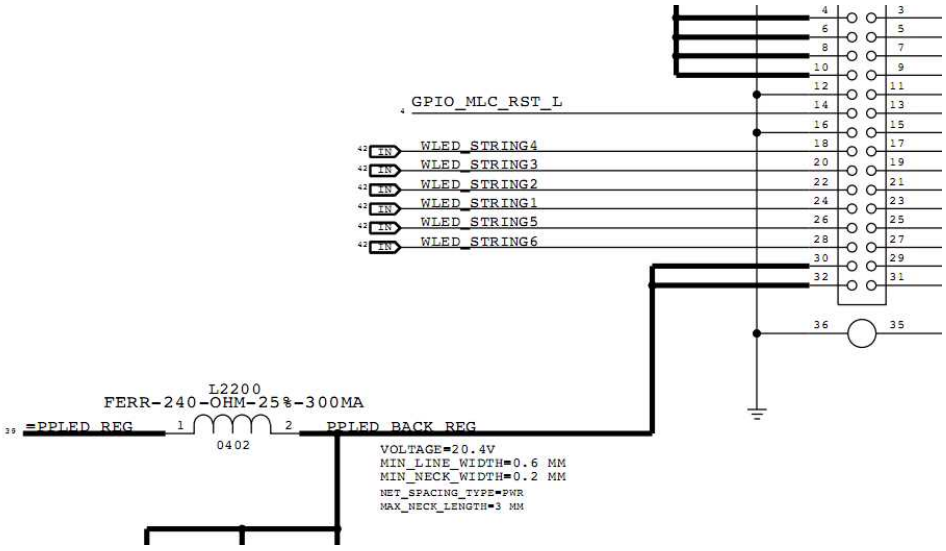

J2201 display seat 30/32 foot backlight VCC, after L2200 insurance, renamed PPLED_REG, PPLED_BACK_REG



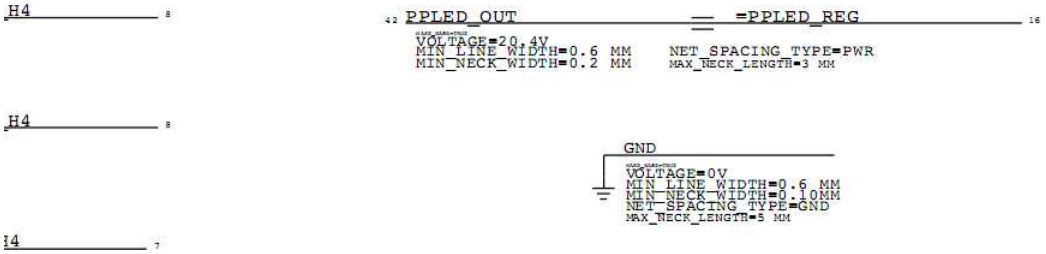

It is connected to the PPLED_OUTVCC via the node,

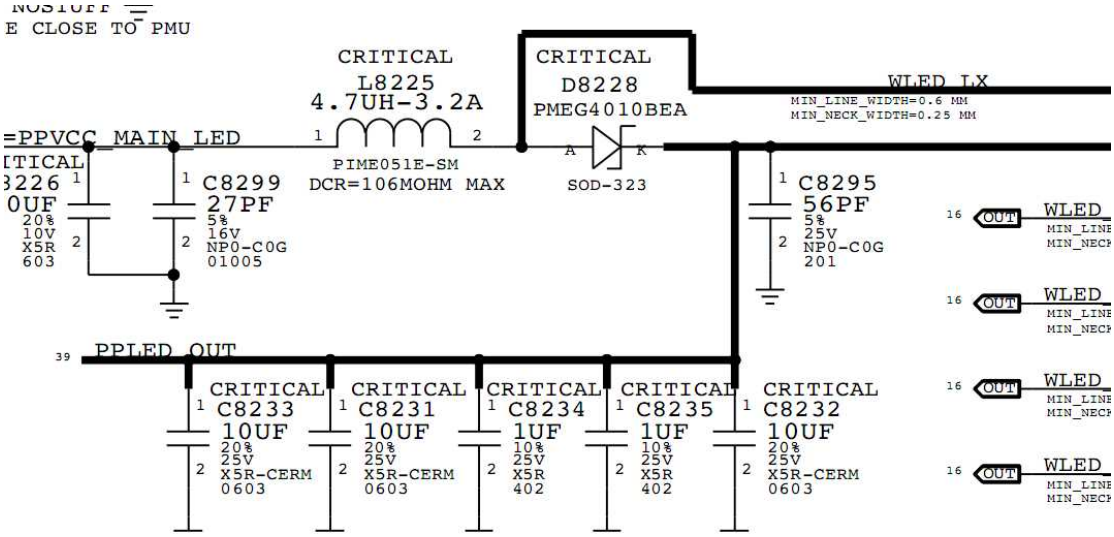

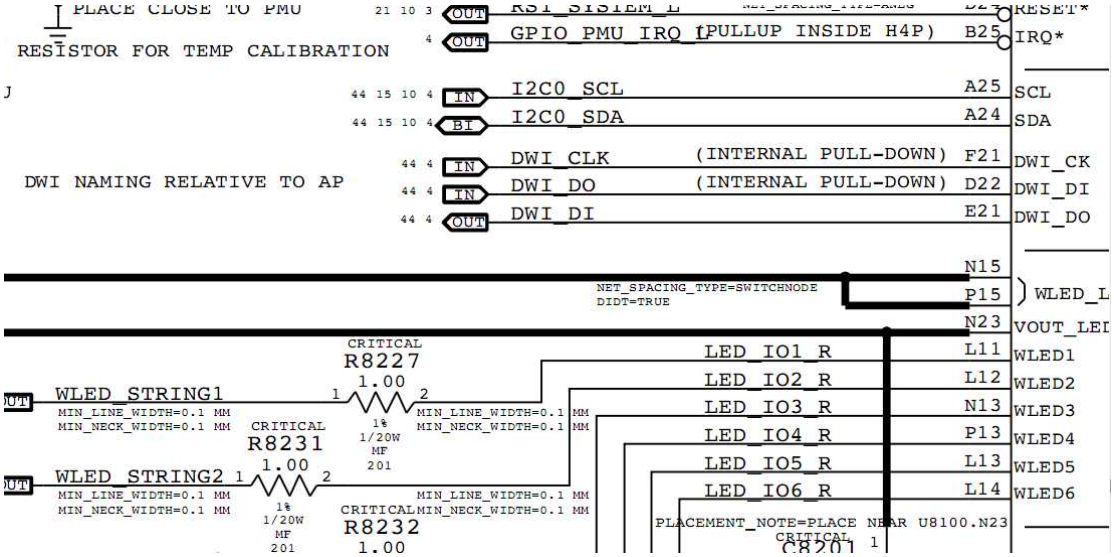

which ultimately comes from the main power chip N23.

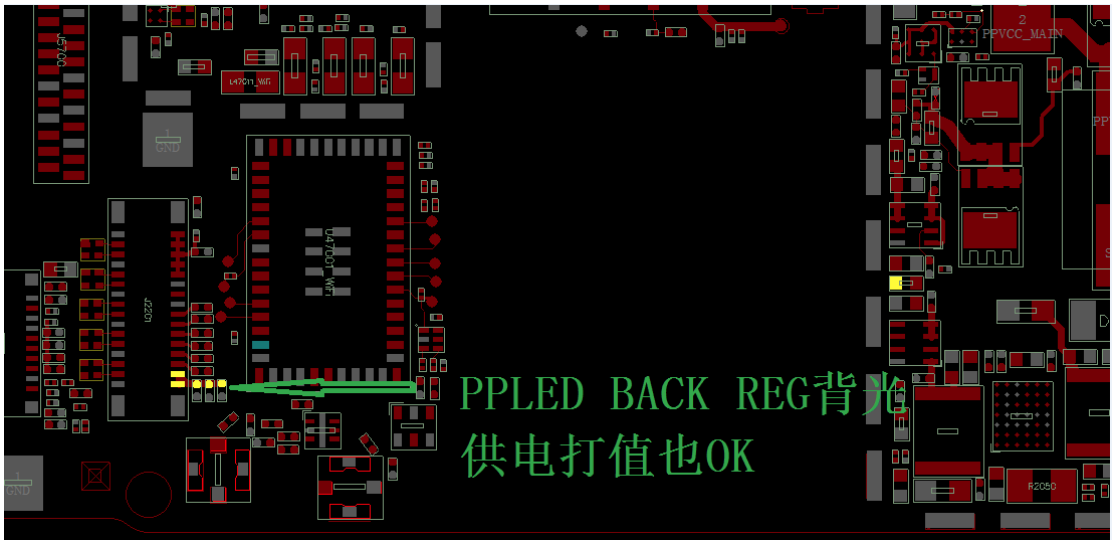

measured J2201 seat 30 feet 290, no obvious abnormalities were found in the diode value chart.

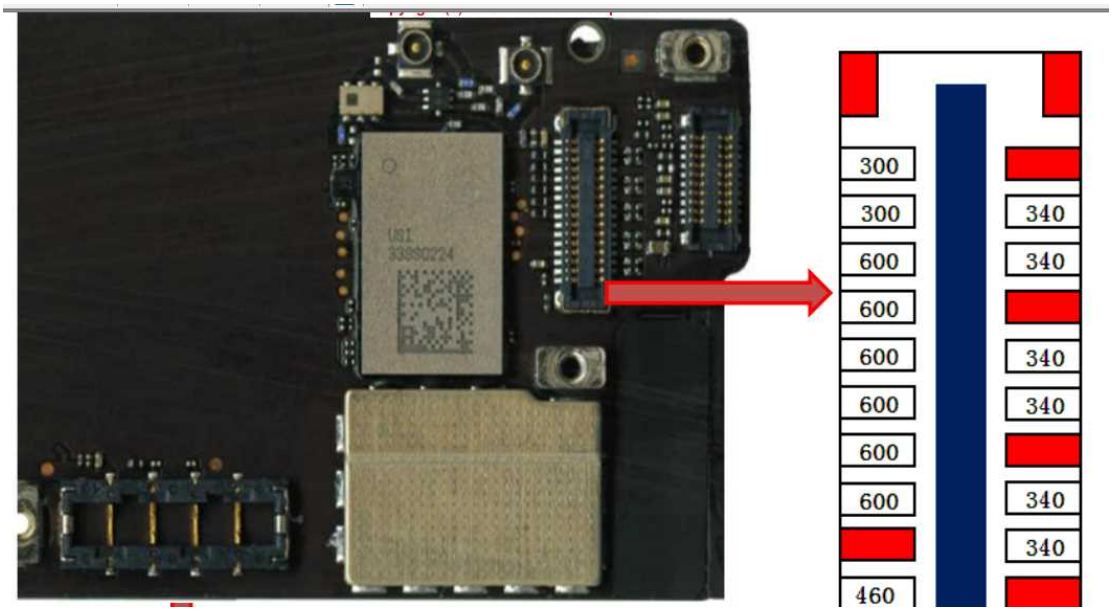

Next, the display MIPI signal is overhauled.The

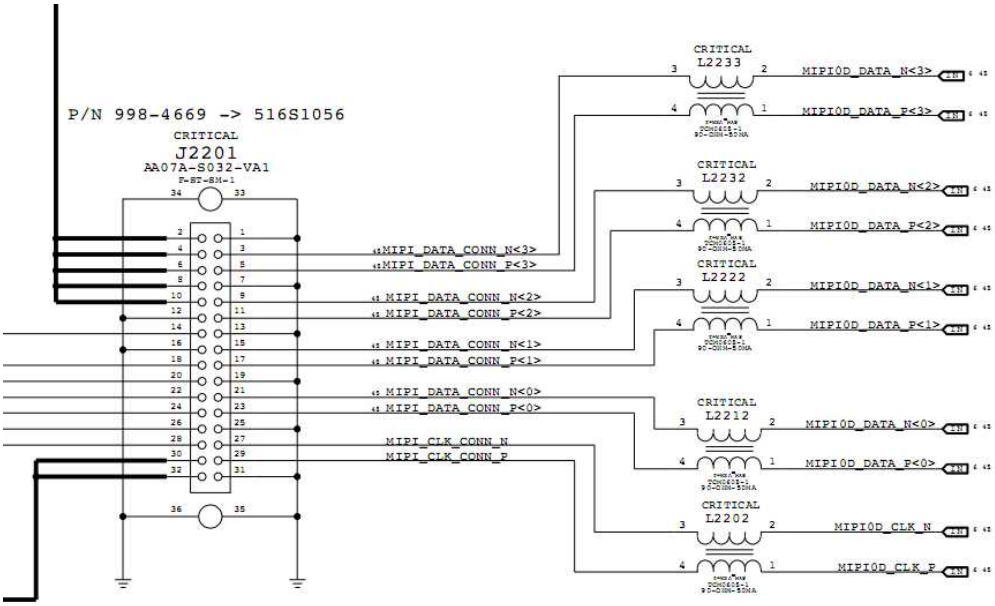

shows that the MIPI consists of 4 pairs of data and a pair of clock signals.

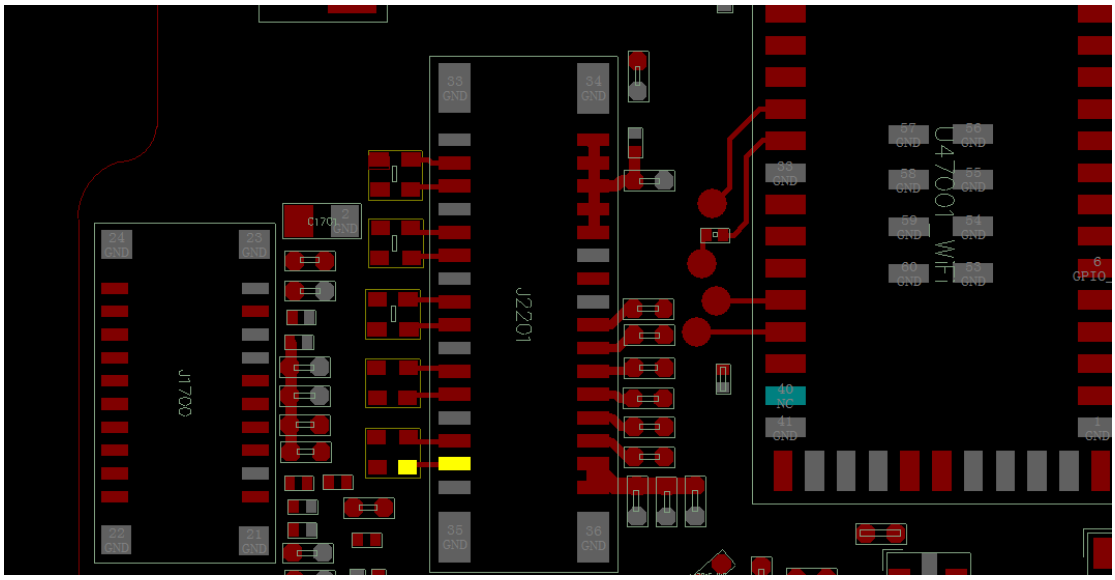

multimeter two poles one by one measured, and finally found that the 29th foot of the seat is infinite (normal diode value to 400 or so),



to the rear line to L2202Inductor on



confirmed that the Inductor is damaged, after deducting Inductor, use a soldering iron to open Electric tin is directly connected.The motherboard is installed and tested after booting, and the function is repaired.Bright machine diagram:

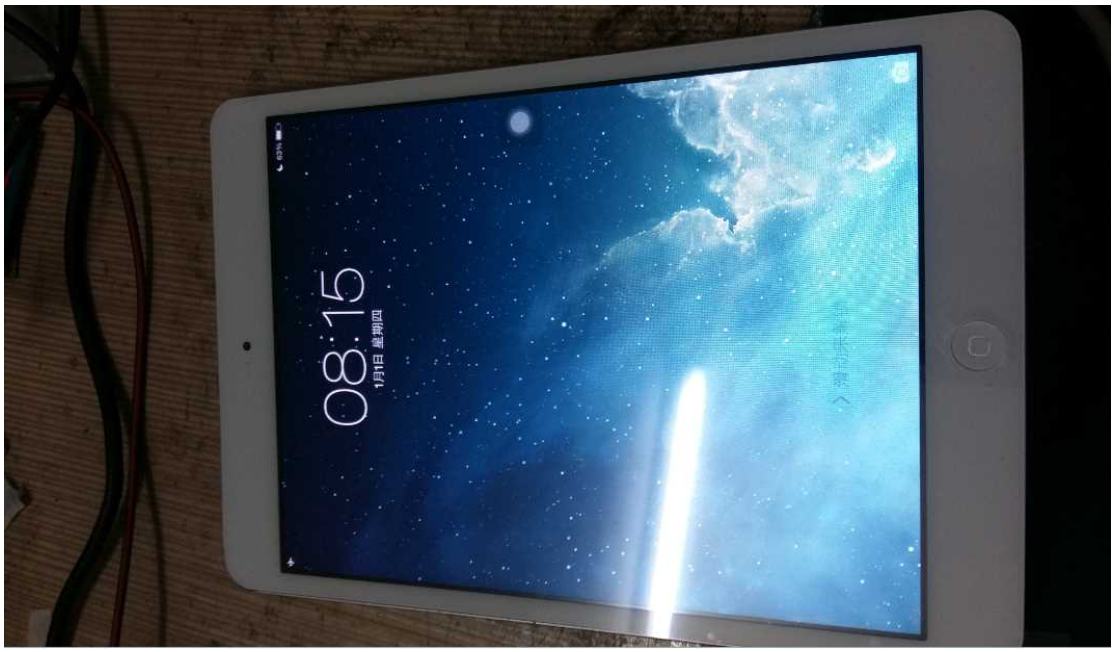

Original: Zhou Mingwu, qq3053987455, the main: intensive industrial computer motherboard, desktop, laptop.